595 Series

2mm Single Level Prism® CBI®

Specifications

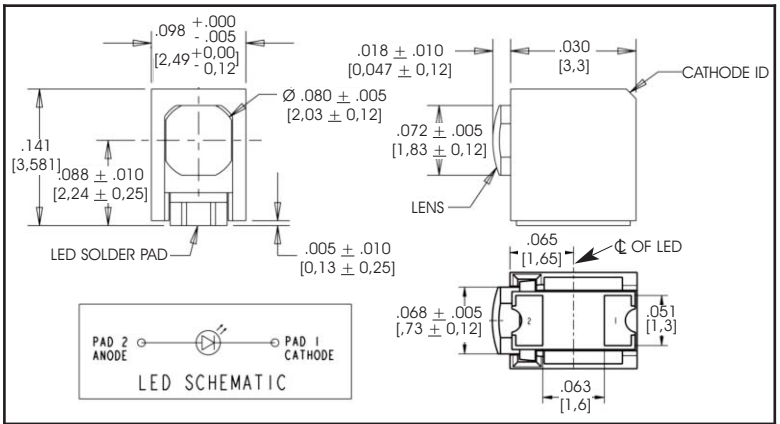

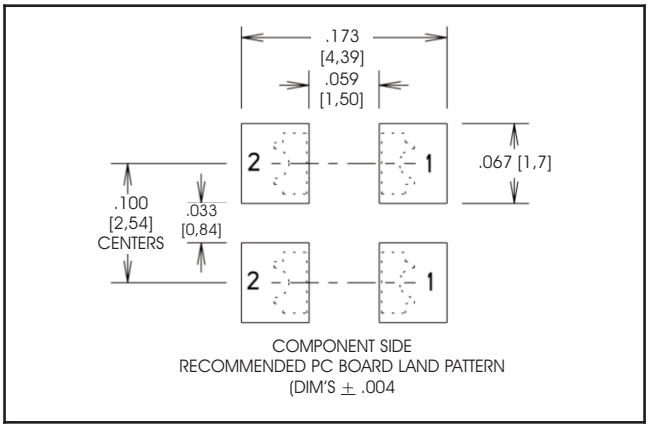

Taping Specification

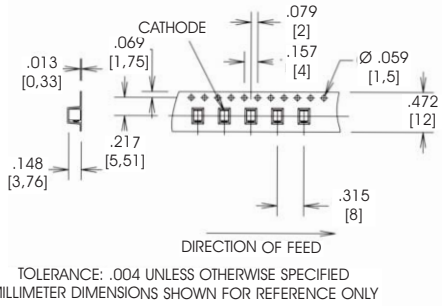

Order Code

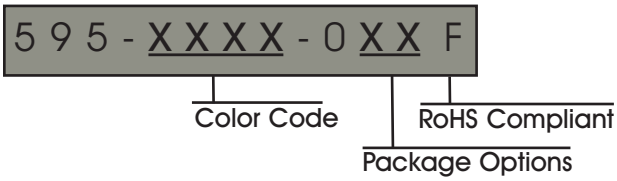

Color Field				Operating Characteristics			
Color Code	Color	Material	Feature	Test Condition	Vf Typ (Volts)	Typ Luminous Intensity (mcd)	Typ Dom Wavelength (nm)
2101	Red	AlGaAs	-----	20 mA	1.7	25.0	647
2201	Green	AlInGaP	Hi. Intensity	20 mA	2.1	70.0	572
2301	Green	AlInGaP	-----	20 mA	2.1	11.0	572
2401	Yellow	AlInGaP	-----	20 mA	2.2	9.0	586
2501	Orange	AlInGaP	-----	20 mA	2.2	9.0	606
2602	Blue	InGaN	-----	20 mA	3.3	80.0*	470
2701	Yellow	AlInGaP	-----	20 mA	2.0	41.0*	590
2902	Green	InGaN	-----	20 mA	3.3	300.0*	525

*Test condition = 10mA

Packaging Type	
Packaging Code	Packaging
02	20 piece strip
07	7" Reel
13	13" Reel